Programming steps to the IDS X64 Control panel working in conjunction to RDC transmitters.

Connecting the transmitter to the panel:

Locate the LINE connectors on the right-hand side of the IDS X64 panel. Connect the one LINE wire to the transmitter negative. Connect the other LINE wire to the transmitter CID connection. Power the transmitter directly from the battery.

Entering programming:

Press 9 9 9 9 *	Installer mode installer code 5 5 5 5

Programming the communicator:

Location –	Press 41	Tel number Comms format	-	Press 5 * (Contact ID)
	Press 51	Tel number	-	Press 1 2 3 4
	Press 61	Partition 1 account Code	-	Press 1 2 3 4

Note that if there is partition 2 – 8, location 62 to 68 should be programmed as 1 2 3 4

Programming zone arming and disarming:

(Note that Zone 7 locations has been used as an example)

Location -	Press 1 *	To access zones 1 - 7
	Press 7 *	To select zone 7
	Press 5 *	To select as a Key switch arm/disarm

To exit and save programming:

Press # #.

DEOL Wiring

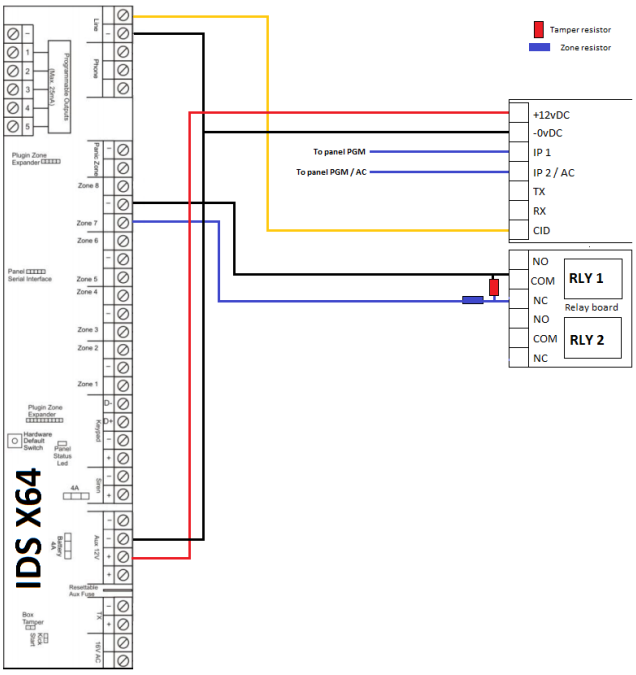
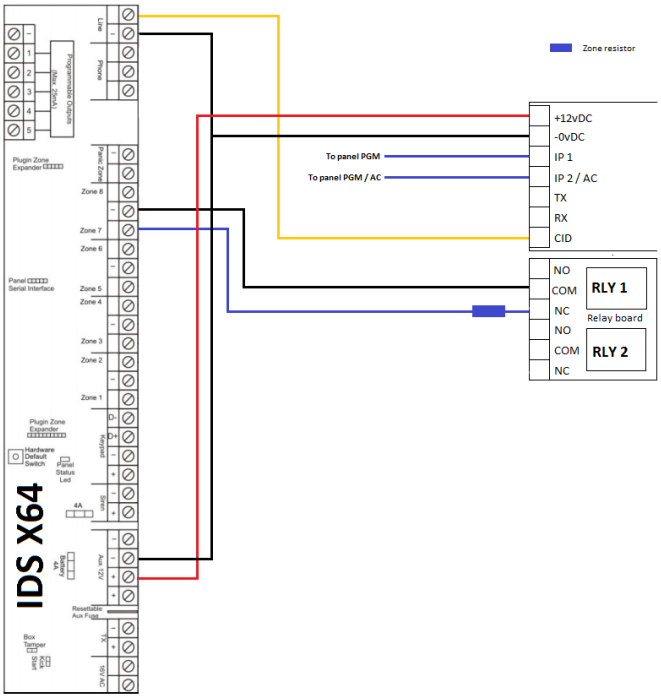
SEOL Wiring